A10-457007-1

REVISIONS

RELEASED PER ECN 10306

ECN 10561 ADD NOTE TO GROUND AND FIELD CONNECTION TO GROUND 8-8-96 R.KOON

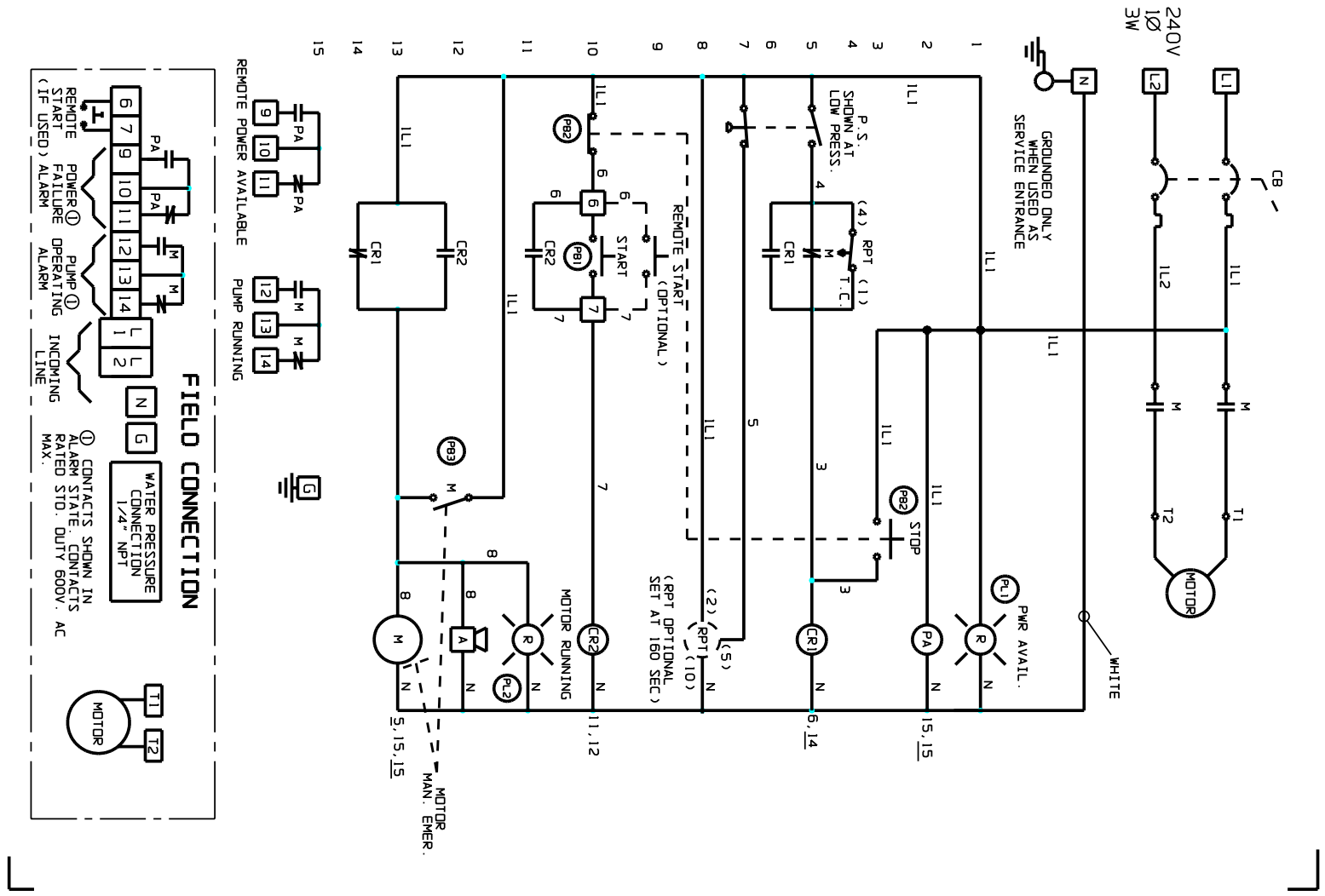

TITLE BUL. 10664 REFPC SIMPLEX SCHEMATIC

MADE BY B.BANKS APP'D BY EFK DATE 5-14-96

JOSLYN CLARK CONTROLS, INC.
LANCASTER, S.C. 29721-0945

PLOT FCT'R: 1/1

FILE: 457007-1

A 10-457007-1

SHEET 1 OF 1 SHEET